Panasonic
BUSINESS

PI-SW201L

Full HD IR Network PTZ Dome Camera

2MP Full HD 30x Network IR PTZ Dome Camera

Key Features

- 30x optical zoom
- Support Triple-streams encoding
- Max. 25/30fps@1080P(19201080) & 50/60fps@720P resolution
- DWDR, Day/Night(ICR), Ultra DNR, Auto iris, Auto focus
- Multiple network monitoring: Web viewer, CMS(PVMS) & Smart Phone(PMOB)
- Max 240°/s pan speed, 360° endless pan rotation
- Up to 300 presets, 5 auto scan, 8 tour, 5 pattern
- Built-in 2/1 alarm in/out
- Micro SD memory, IP66
- IR Distance up to 100m

Technical Specifications

Model		*PI-SW201L*
Camera		
Image Sensor		1/2.8" CMOS
Effective Pixels		1920(H) x 1080(V)
Scanning System		Progressive
Electronic Shutter Speed		1/1 ~ 1/30,000s
Min. Illumination		Color: 0.05Lux@F1.6; B/W: 0.005Lux@F1.6
S/N Ratio		More than 50dB
Video Output		BNC(1.0Vp-p/75), PAL / NTSC
Camera Features		
Day/Night		Auto(ICR) / Color / B/W
Backlight Compensation		BLC / HLC / DWDR (Digital WDR)
White Balance		Auto, ATW, Indoor, Outdoor, Manual
Gain Control		Auto / Manual
Noise Reduction		Ultra DNR (2D/3D)
Privacy Masking		Up to 24 areas
Digital Zoom		16x
Lens		
Focal Length		4.5mm~135mm (30xOptical zoom)
Max Aperture		F1.6 ~ F4.4
Focus Control		Auto / Manual
Angle of View		H: 67.8° ~ 2.77°
Close Focus Distance		100mm~ 1000mm
PTZ		
Pan/Tilt Range		Pan: 0° ~ 360° endless; Tilt:- 15° ~ 90°, auto flip 180°
Manual Control Speed		Pan: 0.1° ~160°/s; Tilt: 0.1° ~120° /s
Preset Speed		Pan: 240° /s; Tilt: 200° /s
Preset		300
PTZ Mode		5 Pattern, 8 Tour, Auto Pan, Auto Scan
Speed Setup		Human-oriented focal length/ speed adaptation
Power up Action		Auto restore to previous PTZ and lens status after power failure
Idle Motion		Activate Preset/ Pan/ Scan/ Tour/ Pattern if there is no command in the specified period
Protocol		Pelco-P/D (Auto recognition)
IR Distance		100m (2 near IR LED+ 4 far IR LED)
Video		
Compression		H.264H/H.264B/H.264/ MJPEG
Resolution		1080P(1920×1080) / 720P(1280×720) / D1(704×576/ 704×480) /CIF (352×288/352×240)
Frame Rate	Main Stream	1080P/ D1 (1 ~ 25/30fps), 720P(1~50/60fps)
	Sub Stream 1	D1/CIF(1 ~ 25/30fps)
	Sub Stream 2	720P/D1/ CIF (1 ~ 25/30fps)
Bit Rate		H.264: 56K ~ 8192Kbps, MJPEG: 56K ~ 20480Kbps
Audio		
Compression		G.711a / G.711u(32kbps)/ PCM(128kbps)
Interface		1/1 channel In/Out
Intelligent Function		
IVS		Tripwire, Intrusion, Abandoned Object Detection, Missing Object Detection,
Face Detection		Support
Network		
Ethernet		RJ-45 (10/100Base-T)
Protocol		Ipv4/ IPv6, HTTP, HTTPS, SSL, TCP/IP, UDP, UPnP, ICMP, IGMP, SNMP, RTSP, RTP, SMTP, NTP, DHCP, DNS, PPPOE, DDNS, FTP, IP Filter, QoS, Bonjour, 802.1x
Compatibility		ONVIF PSIA CGI
Max. User Access		20 users
Smart Phone		iPhone, iPad, Android

Auxiliary Interface	
Memory Slot	Micro SD, Max 128GB
RS485	1
Alarm	2/1 channel In/Out

General	
Power Supply	AC 24V/3A
Power Consumption	10.5W, 26W (IR on, Heater on)
Working Environment	-40°C ~ 60°C / Less than 90% RH
Ingress Protection	IP66
Dimensions	204.7(mm) x 359.9(mm)
Weight	5kg

Dimensions (mm)

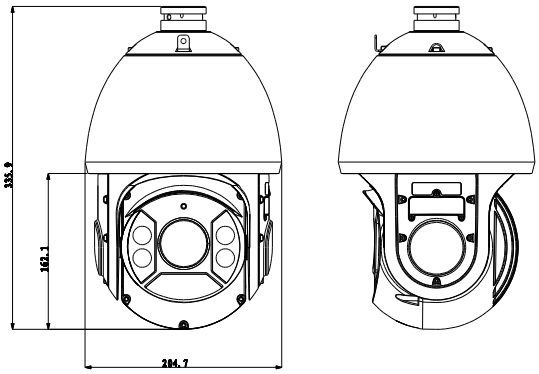

Accessories

Accessories(Optional)

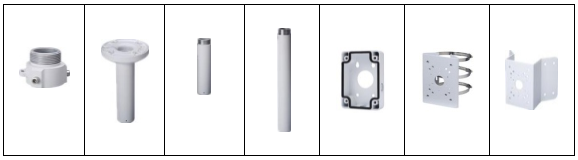

SHINRAI Series