Panasonic

Wireless Video Intercom System
VL-SW251

Key Features

- **Wireless Handset:**
  Check visitors and respond promptly from everywhere in the home and even while you are doing something else, by wireless handset.
  UP to 4 wireless monitor connectable. Max wireless range is 100 m with no obstacles. You can add on repeaters expand the range.
- **Picture Recording Function:** The intercom records the images of up to 400. (50 separate sessions: 1 session consists of 8 shots)
- **5-inch Wide Screen:** Main monitor offer easy viewing at wide angles both vertical and horizontal.
- **Voice Change Function:** This function makes woman's voice (higher keys) sounds like a man's (lower keys).
- **Intercom Call:** Both the main monitor station and the sub monitor station can transfer a door call using the same operation. When using multiple sub monitor stations, you can make intercom calls between the sub monitor stations.
- **Electric Lock Release Support (Door Opener):**
  The door lock can be easily and quickly released even from the second floor of the house.
- **Night Vision with LED lights (illumination lamp) :**
  Door Station is equipped with LED lights (illumination lamp). It enables the colour display of visitors at a distance of about 50 cm at night.
- **Expanding your system with optional units**

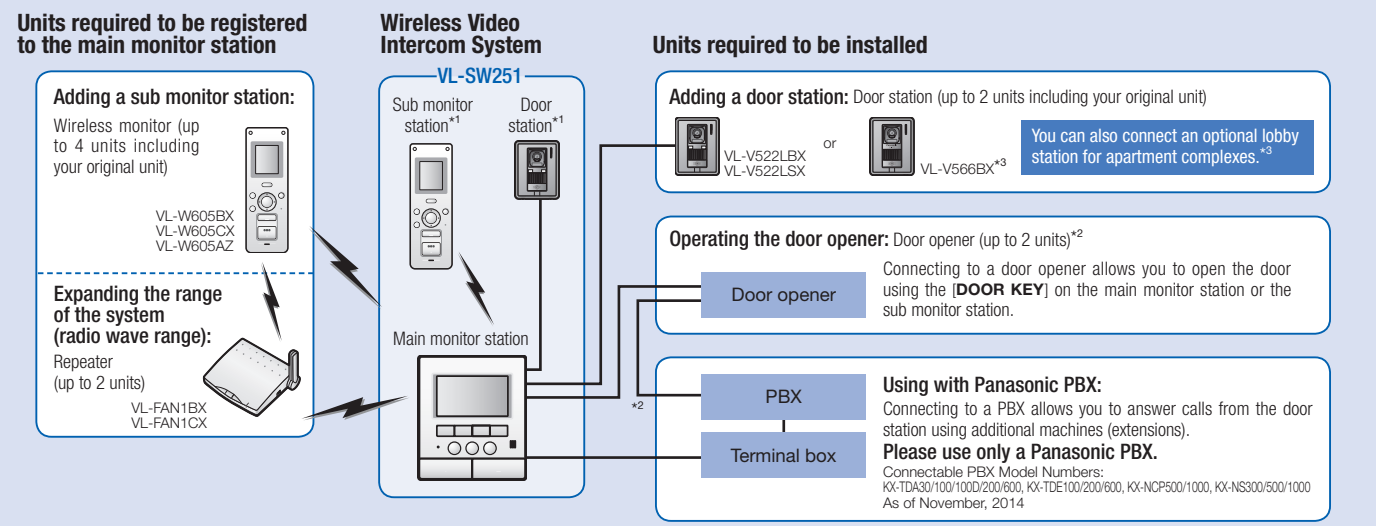

*1 For VL-MW251BX/VL-MW251CX/VL-MW251SX users: The sub monitor station and door station are optional (not included). *2 You can connect up to 2 door openers to the main monitor station. If the main monitor station is connected to a PBX, one of the 2 door openers can be connected to the PBX and operated from the PBX extensions. *3 Cannot be connected to the VL-SW251AZ

Accessory information

For the sub Monitor station: AC adaptor (Cord length: Approx. 1.8 m) x 1, Battery x 1, Battery cover x 1, Charger x 1, Charger stand x 1
For the Door Station: Wood screws (3.8 mm x 20 mm) x 2
For the Main Monitor Station: Mounting bracket x 1, Wood screws (4 mm x 16 mm) x 2

Optional Accessories

Door Station (Doorphone)
VL-V522LBX
VL-V522LSX

Door Station (Doorphone)
VL-V566BX

Wireless Monitor (Sub monitor station)
VL-W605BX
VL-W605CX
VL-W605AZ

Repeater
VL-FAN1BX
VL-FAN1CX

Relative Product

Lobby Station
VL-V590BX
VL-V590CX

Main Monitor Station (Main monitor)
VL-MV251BX
VL-MV251CX
VL-MV251SX

- Up to 20 Main monitors connectable
- Cannot be connected to the VL-SW251AZ.

Model Composition

VL-SW251	**VL-SW251BX** (VL-MW251BX x 1, VL-W605BX x 1, VL-V522L) / **VL-SW251CX** (VL-MW251CX x 1, VL-W605CX x 1, VL-V522L) **VL-SW251SX** (VL-MW251BX x 1, VL-W605BX x 1, VL-V522L) / **VL-SW251AZ** (VL-MW251AZ x 1, VL-W605AZ x 1, VL-V522L)

Specifications

	VL-MW251BX/CX/AZ	VL-V522L	VL-W605BX/CX/AZ	
Model number and name	Main Monitor Station (Main monitor)	Door Station (Doorphone)	Wireless Monitor (Sub monitor station)	
			Main body	Charger
Dimensions	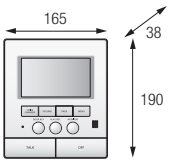	Up to 2 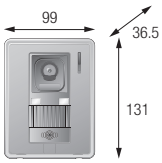	Up to 4 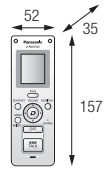	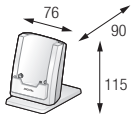
Power supply	100 – 240 V AC, 50/60 Hz	Supplied by the Main Monitor Station	Ni-MH battery (3.6 V DC / 650 mAh)	AC adaptor VL-W605BX: PQLV219BX (100-240 V AC, 50/60 Hz) VL-W605CX: PQLV219E (220-240 V AC, 50/60Hz) VL-W605AZ: PQLV219AZ (220-240 V AC, 50/60 Hz)
Power consumption	Standby: Approx. 0.04 A During operation: Approx. 0.28 A	-	-	-
Dimensions (H x W x D) (Excluding protruding sections)	Approx. 190 x 165 x 38 mm	Approx. 131 x 99 x 36.5 mm	Approx. 157 x 52 x 35 mm	Approx. 115 x 76 x 90 mm Approx. 105 x 76 x 48 mm (using without the stand)
Weight	Approx. 785 g	Approx. 200 g	Approx. 175 g (including the battery)	Approx. 115 g (including the stand)
Operating environment	0 °C to 40 °C, Up to 90 % RH (Relative Humidity) non condensing	-10 °C to 50 °C, Up to 90 % RH (Relative Humidity) non condensing	0 °C to 40 °C, Up to 90 % RH (Relative Humidity) non condensing	0 °C to 40 °C, Up to 90 % RH (Relative Humidity) non condensing
Display	Approx. 5-inch, wide colour display	-	1.8″ colour LCD monitor	-
Frequency	2.402 GHz – 2.481 GHz	-	2.402 GHz – 2.481 GHz	-
Viewing angle	-	Horizontally: Aprrox. 87° Vertically: Approx. 66°	-	-
Installation method	Wall mount (Wall mount bracket included)	Wall mount (Wall mount base included)	-	-
Minimum illuminance required	-	1 lx (within approx. 50cm from the camera lens)	-	-
Lighting method	-	Warm white LED lights, Infrared LEDs	-	-
IP rating/IK rating	-	IPX3*1	-	-
External material	Flame retardant ABS resin	Flame retardant ABS resin	ABS resin	ABS resin

*1 Water resistance is only assured if the camera is installed correctly according to the instructions in the Installation Guide, and appropriate water protection measures are taken.

	VL-FAN1BX/CX	VL-V590BX/CX
Model number and name	Optional Repeater for Wireless Monitor	Optional Lobby Station
Dimensions	Up to 2 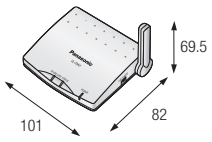 *Cannot be connected to the VL-SW251AZ.	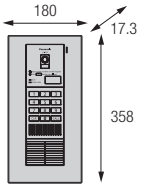 *Cannot be connected to the VL-SW251AZ.
Power supply	AC adaptor (100 – 240 V AC, 50/60 Hz) VL-FAN1BX: 2 pin AC plug VL-FAN1CX: 3 pin AC plug	100 V – 240 V AC, 50/60 Hz VL-V590BX: 2 pin AC plug VL-V590CX: 3 pin AC plug
Power consumption	Standby: Approx. 0.05 A During operation: Approx. 0.08 A	Standby: Approx. 0.02 A During operation: Approx. 0.03 A
Dimensions (H x W x D) (Excluding protruding sections)	Approx. 27 x 101 x 82 mm Approx. 69.5 x 101 x 82 mm (when raising the antenna)	Approx. 358 x 180 x 17.3 mm (Excluding sections embedded into the wall)
Weight	Approx. 85 g	Approx. 2.0 kg
Operating environment	0 °C to 40 °C, Up to 90 % RH (Relative Humidity) non condensing	-10 °C to 50 °C, Up to 90 % RH (Relative Humidity) non condensing
Frequency	2.402 GHz – 2.481 GHz	-
Viewing angle	-	Horizontally: Aprrox. 87° Vertically: Approx. 66°
Installation method	-	Wall mount (Flush mounted box included)
External material	Flame retardant PS resin	Stainless steel and flame retardant ABS resin

Wiring schematic diagram

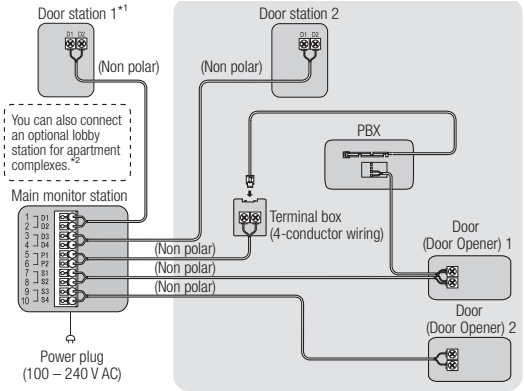

*1 For VL-MW251BX/VL-MW251CX/VL-MW251SX users:
The door station is optional (not included).
*2 Connecting an optional lobby station for apartment complexes

Wire type and length

- Wire (between the main monitor station and the door station):

Type	Distance	Loop resistance
General cable CAT-3	Maximum 50 m	10 Ω or lower
General cable 22 AWG (ø 0.65)	Maximum 100 m	

- Wire (between the main monitor station and PBX):
  Type: General cable CAT-3 or 22 AWG (ø 0.65)
  Distance: Maximum 100 m

Installing the Doorphone

- Example: Installation height is 1450 mm (standard position).

Side view

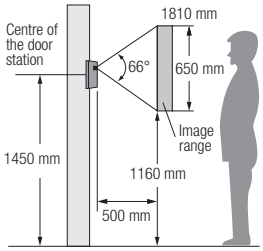

Top view

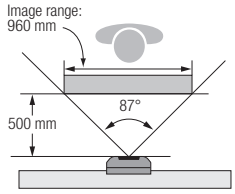

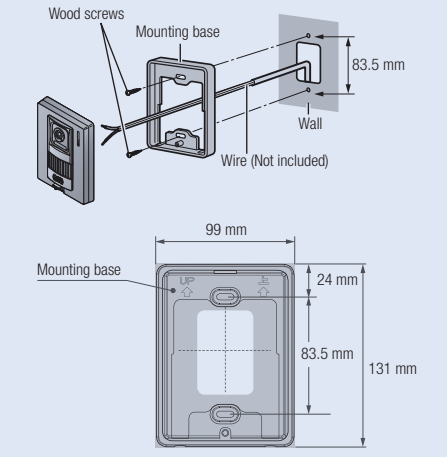

Installing the Main Monitor

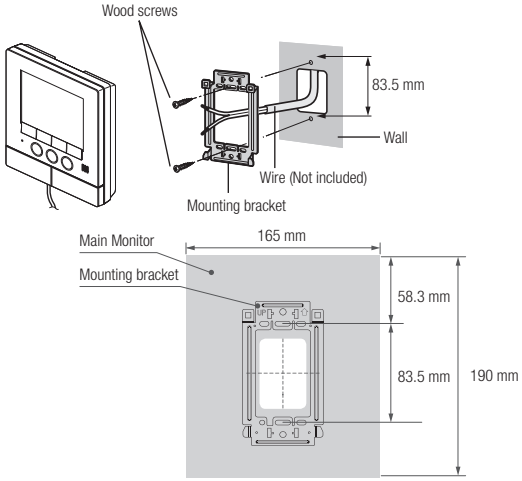

- The actual product may vary slightly from photograph.
- Weights and dimensions are approximate.
- Design and Specifications are subject to change without notice.
- These products may be subject to export control regulations.

Important
– Safety Precaution: carefully read the operating instructions and installation manual before using this product.